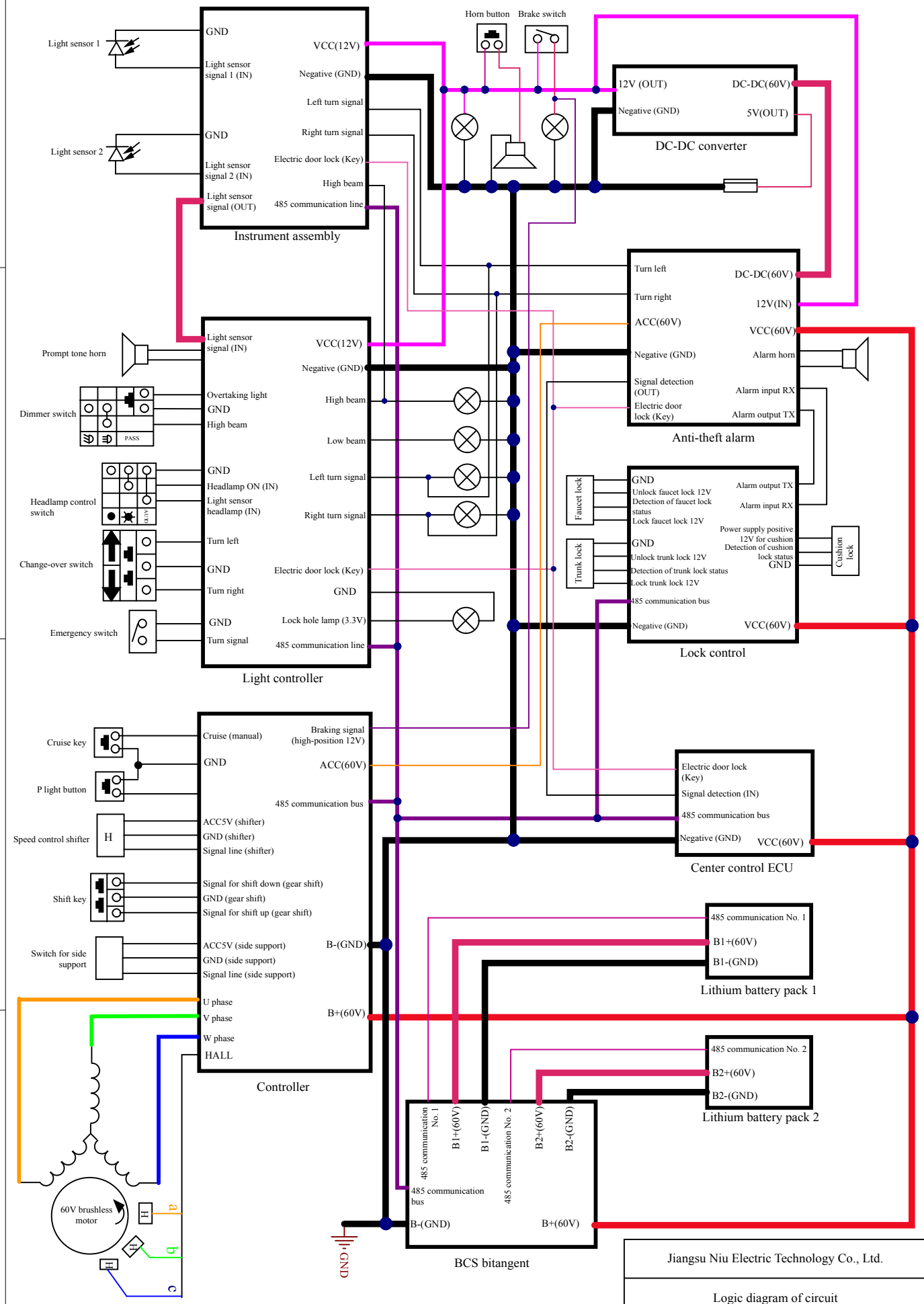

Jiangsu Niu Electric Technology Co., Ltd.

Logic diagram of circuit

N1SP-RAL